AiP8911R/AiP8912R/AiP8914R
1.5MHz 40V High-Slew-Rate Rail-to-Rail Output Amplifier

Product Specification

Specification Revision History：

Version	Date	Description
2025-11-A0	2025-11	New
2026-09-A1	2026-09	Modify parameters

Contents

1、General Description **1**
2、 Pin Description **3**
2.1、Pin Configurations 3
2.2、Pin Description 4
3、Electrical Parameter **5**
3.1、Absolute Maximum Ratings 5
3.2、Recommended Operating Conditions 5
3.3、Electrical Characteristics 5
4、Characteristic Curve **7**
5、Function Description **9**
6、Package Information **10**
6.1、SOT23-5 10
6.2、SOP8 11
6.3、MSOP8 12
6.4、TSSOP8 13
6.5、SOP14 14
6.6、TSSOP14 15
7、Statements And Notes **16**
7.1、The name and content of Hazardous substances or Elements in the product 16
7.2、Notes 16

i-core

1、General Description

AiP891XR is a 1.5MHz high-voltage, high-slew-rate rail-to-rail output amplifier, it operates over a supply voltage range of 3V to 40V, with a quiescent current of 0.17mA per amplifier and a gain-bandwidth product of 1.5MHz. It features a wide input common-mode voltage range and rail-to-rail output, making it suitable for motor control and industrial process control applications.

Features:

- Supply voltage: 3V to 40V
- Gain-bandwidth product: 1.5MHz
- Slew rate: 6V/μs
- Input offset voltage: ≤4mV
- Input common-mode voltage range: VSN to VSP-1.5 V
- Output short-circuit current: 38mA
- Open-loop voltage gain: 120dB
- Operating temperature: -40℃ to 125℃
- Package form:
  - AiP8911R：SOT23-5/SOP8
  - AiP8912R：SOP8/MSOP8/TSSOP8
  - AiP8914R：SOP14/TSSOP14

i-core

Ordering Information:

Reel packing specifications:

Part number	Packaging form	Marking code	Reel quantity	Boxed reel quantity	Notes	Moisture sensitivity level
AiP8911RGB235.TR	SOT23-5	8911R	3000PCS/reel	30000PCS/box	Dimensions of plastic enclosure: 2.9mm×1.6mm Pin spacing: 0.95mm	MSL3
AiP8911RSA8.TR	SOP8	AiP8911R	4000PCS/reel	8000PCS/box	Dimensions of plastic enclosure: 4.9mm×3.9mm Pin spacing: 1.27mm	MSL3
AiP8912RSA8.TR	SOP8	AiP8912R	4000PCS/reel	8000PCS/box	Dimensions of plastic enclosure: 4.9mm×3.9mm Pin spacing: 1.27mm	MSL3
AiP8912RMA8.TR	MSOP8	AiP8912R	5000PCS/reel	10000PCS/box	Dimensions of plastic enclosure: 3.0mm×3.0mm Pin spacing: 0.65mm	MSL3
AiP8912RTB8.TR	TSSOP8	8912R	5000PCS/reel	10000PCS/box	Dimensions of plastic enclosure: 4.4mm×3.0mm Pin spacing: 0.65mm	MSL3
AiP8914RSA14.TR	SOP14	AiP8914R	4000PCS/reel	8000PCS/box	Dimensions of plastic enclosure: 8.7mm×3.9mm Pin spacing: 1.27mm	MSL3
AiP8914RTA14.TR	TSSOP14	AiP8914R	5000PCS/reel	10000PCS/box	Dimensions of plastic enclosure: 5.0mm×4.4mm Pin spacing: 0.65mm	MSL3

Note: If the physical information is inconsistent with the ordering information, please refer to the actual product.

2、 Pin Description

2.1、Pin Configurations

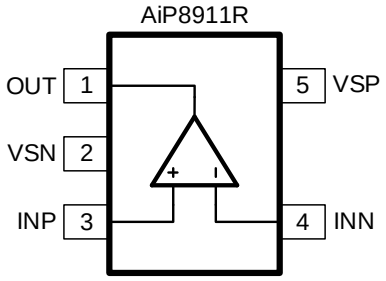

SOT23-5
(TOP VIEW)

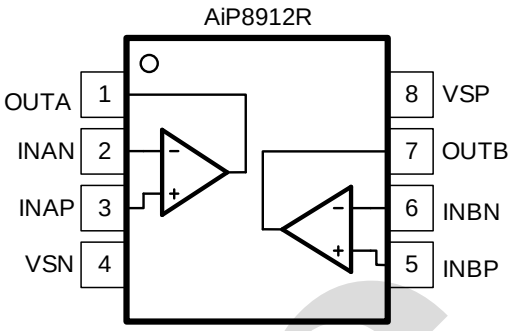

SOP8/MSOP8/TSSOP8
(TOP VIEW)

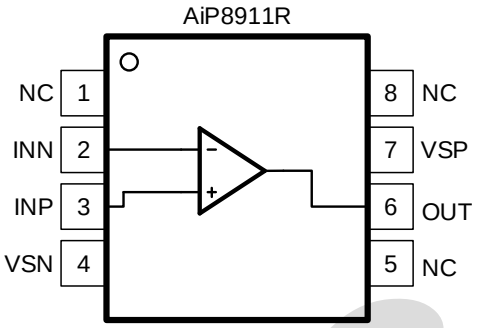

SOP8
(TOP VIEW)

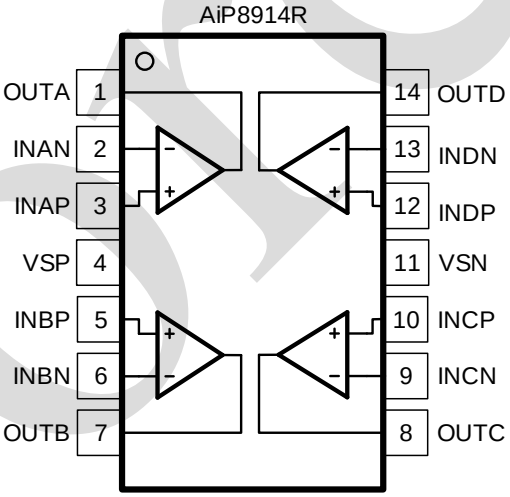

SOP14/TSSOP14
(TOP VIEW)

2.2、Pin Description

AiP8911R: SOT23-5

Pin No.	Pin Name	Description
1	OUT	Output
2	VSN	Ground (negative power supply)
3	INP	Positive input
4	INN	Negative input
5	VSP	Power supply (positive power supply)

AiP8911R:SOP8

Pin No.	Pin Name	Description	Pin No.	Pin Name	Description
1	NC	No connect	5	NC	No connect
2	INN	Negative input	6	OUT	Output
3	INP	Positive input	7	VSP	Power supply (positive power supply)
4	VSN	Ground (negative power supply)	8	NC	No connect

AiP8912R: SOP8, MSOP8, TSSOP8

Pin No.	Pin Name	Description	Pin No.	Pin Name	Description
1	OUTA	A output	5	INBP	B positive input
2	INAN	A negative input	6	INBN	B negative input
3	INAP	A positive input	7	OUTB	B output
4	VSN	Ground (negative power supply)	8	VSP	Power supply (positive power supply)

AiP8914R: SOP14, TSSOP14

Pin No.	Pin Name	Description	Pin No.	Pin Name	Description
1	OUTA	A output	8	OUTC	C output
2	INAN	A negative input	9	INCN	C negative input
3	INAP	A positive input	10	INCP	C positive input
4	VSP	Power supply (positive power supply)	11	VSN	Ground (negative power supply)
5	INBP	B positive input	12	INDP	D positive input
6	INBN	B negative input	13	INDN	D negative input
7	OUTB	B output	14	OUTD	D output

i-core

3、Electrical Parameter

3.1、Absolute Maximum Ratings

(T_{amb}=25℃, unless otherwise specified)

Characteristic	Symbol	Conditions	Min.	Max.	Unit
Supply voltage	VSP	-	-0.3	44	V
Differential input voltage	$\|V_{IN,DIFF}\|$	-	0	(VSP)-(VSN)	V
Ambient temperature	T_{amb}	-	-40	125	℃
Storage temperature	T_{stg}	-	-65	150	℃
Soldering temperature	T_L	10s	260		℃
Electrostatic discharge	ESD	HBM	6000		V

3.2、Recommended Operating Conditions

Parameter	Symbol	Min.	Typ.	Max.	Unit
Supply voltage (single power supply)	VS	3	-	40	V
Supply voltage (dual power supply)	VS	±1.5	-	±20	V
Ambient temperature	T_{amb}	-40	-	125	℃

3.3、Electrical Characteristics

(T_{amb}=25℃, VSP=30V, VCM=VSP/2, C_L=100pF, R_L=10KΩ and connected to VSP/2, unless otherwise specified)

Parameter	Symbol	Conditions		Min.	Typ.	Max.	Unit
Quiescent current per amplifier	I_Q	AiP8911R	-	-	0.18	0.32	mA
			-40℃ to 125℃	-	-	0.5	
		AiP8912R AiP8914R	-	-	0.17	0.3	
			-40℃ to 125℃	-	-	0.45	
Input offset voltage	V_{OS}	-		-	0.5	-	mV
		-40℃ to 125℃		-4	-	4	
Input offset voltage drift	$\Delta V_{OS}/\Delta T$	-40℃～125℃		-	2	-	μV/°C
Input bias current	I_B	-40℃ to 125℃		-	20	1400	pA
Input offset current	I_{OS}	-40℃ to 125℃		-	7	-	pA
Different input current	I_{IN}	VS=36V, V_{ID}=36V		-	10	-	nA
Input capacitance	C_{IN}	Differential mode		-	5	-	pF
		Common mode		-	2.5	-	
Input common-mode voltage range	V_{CM}	-		VSN	-	VSP-1.5	V
Open-loop voltage gain	A_{OL}	-		95	120	-	dB
		-40℃ to 125℃		90	-	-	
Power supply rejection ratio	PSRR	-		95	120	-	dB
		-40℃ to 125℃		90	-	-	

Common-mode rejection ratio	CMRR	V_{CM}=0 to 28V	-	95	115	-	dB
			-40℃ to 125℃	90	-	-	
Output swing from positive rail	V_{OH}	R_L=10KΩ to VSP/2	-	-	0.25	0.6	V
			-40℃ to 125℃	-	-	1	
		R_L=2KΩ to VSP/2	-	-	1.2	1.5	
			-40℃ to 125℃	-	-	2.3	
Output swing from negative rail	V_{OL}	R_L=10KΩ to VSP/2	-	-	0.07	0.3	V
			-40℃ to 125℃	-	-	0.6	
		R_L=2KΩ to VSP/2	-	-	0.35	0.8	
			-40℃ to 125℃	-	-	1.6	
Output short-circuit current	I_{SC}	R_L=0 to VSP, sink		25	48	-	mA
		R_L=0 to VSN, source		25	38	-	
Gain-bandwidth product	GBP	G=100		-	1.5	-	MHz
Phase margin	PM	G=1		-	60	-	°
Gain margin	GM	G=1		-	10	-	dB
Overload recovery time	t_{OR}	G*VIN>VS		-	460	-	ns
Slew rate	SR	G=1, step=10V, rising edge		-	6	-	V/μs
		G=1, step=10V, falling edge		-	6	-	
Settling time	t_s-0.1%	G=11，step=2.5V		-	3	-	μs
	t_s-0.01%	G=11，step=2.5V		-	3.8	-	
Input voltage noise	E_N	f=0.1Hz to 10Hz		-	5.4	-	μV_{RMS}
Input voltage noise density	en	f=1KHz		-	60	-	nV/√Hz
		f=10KHz		-	40	-	
Input current noise	i_N	f=1KHz		-	4	-	fA/√Hz
Total harmonic distortion	THD	f=1KHz, G=1, RL=10KΩ, V_{OUT}=6V_{RMS}		-	0.0005	-	%

4、Characteristic Curve

(T_{amb}=25℃, VSP=30V, VCM=VSP/2, R_L=10KΩ and connected to VSP/2, unless otherwise specified)

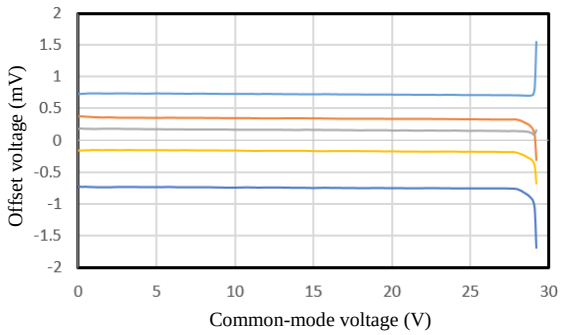

Figure 1. Offset voltage vs. Common-mode voltage, 5ch Data

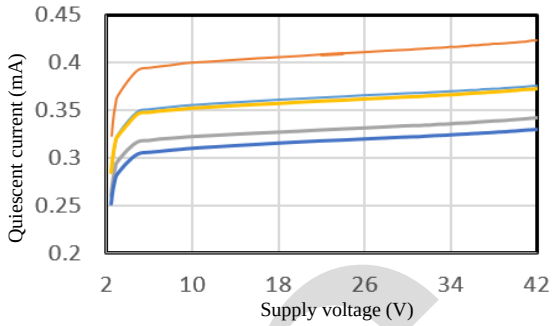

Figure 2. Quiescent current vs. Supply voltage AiP8912R, 5 Samples

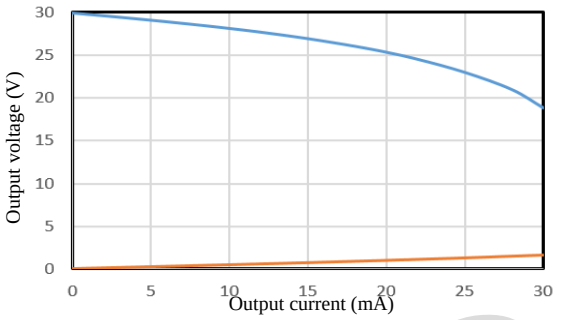

Figure 3. Output voltage vs. Output current

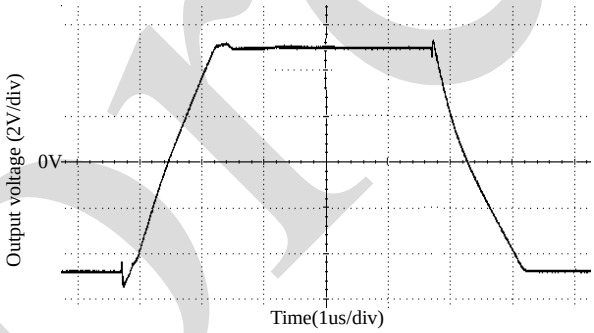

Figure 4. Large signal step response G=1, RL=10KΩ, CL=100pF

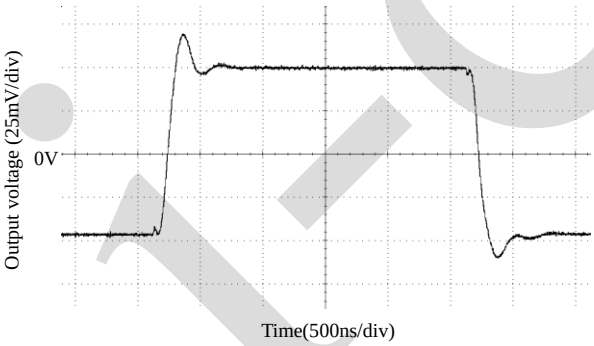

Figure 5. Small signal step response G=1, RL=10KΩ, CL=100pF

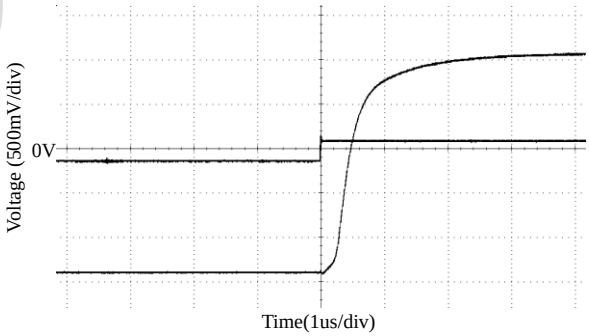

Figure 6. Positive setup time VS=3.3V, VCM=1.65V, G=11

i-core

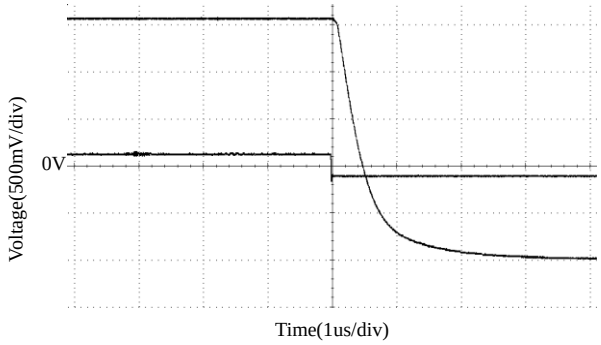

Figure 7. Negative setup time
VS=3.3V, VCM=1.65V, G=11

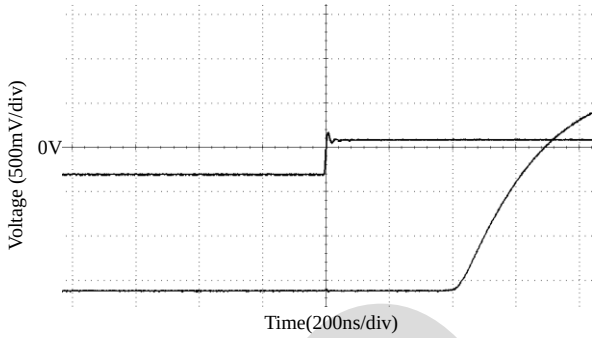

Figure 8. Positive overload recovery
VS=3.3V, VCM=1.65V, G=11

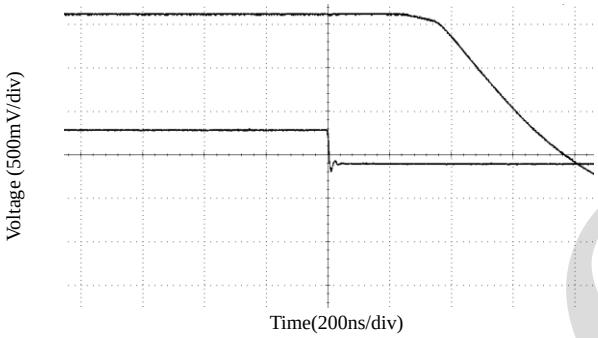

Figure 9. Negative overload recovery
VS=3.3V, VCM=1.65V, G=11

i-core

5、Function Description

AiP891XR is a 1.5MHz high-voltage, high-slew-rate rail-to-rail output amplifier, it operates over a supply voltage range of 3V to 40V, with an operating temperature range of -40℃ to 125℃. Each amplifier has a quiescent current of 0.17mA and a gain-bandwidth product of 1.5MHz. The input common-mode voltage range is VSN to VSP-1.5V. It adopts a CLASS AB output stage to deliver rail-to-rail output. In addition, an on-chip slew boost circuit is designed to achieve a high slew rate of 6V/μs.

i-core

6、Package Information

6.1、SOT23-5

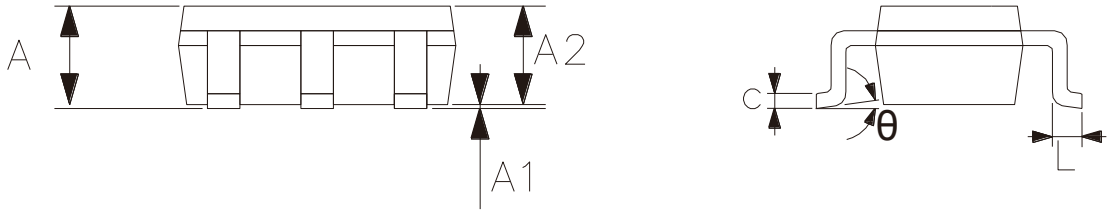

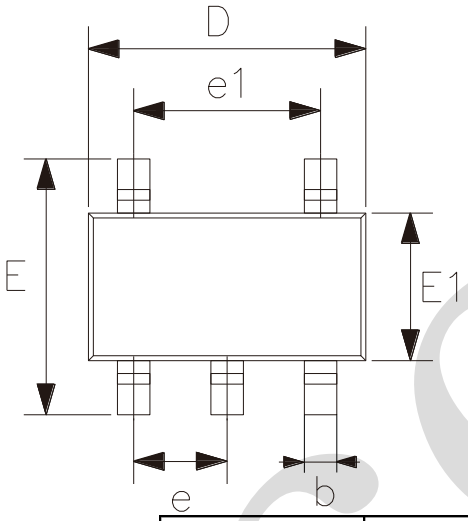

2023/12/A	Dimensions In Millimeters	
Symbol	**Min.**	**Max.**
A	—	1.26
A1	0.00	0.12
A2	1.00	1.20
b	0.30	0.50
c	0.10	0.20
D	2.82	3.02
E	2.60	3.00
E1	1.50	1.70
e	0.95	
e1	1.80	2.00
L	0.30	0.60
θ	0°	8°

6.2、SOP8

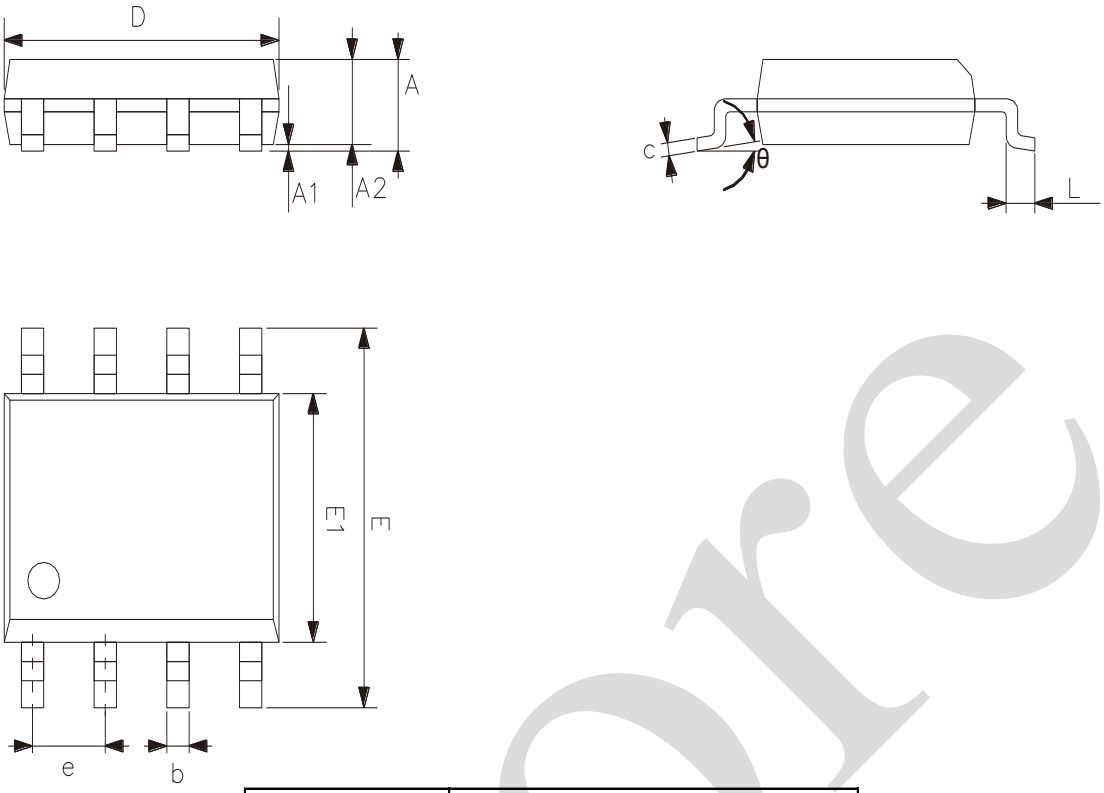

2023/12/A	Dimensions In Millimeters	
Symbol	**Min.**	**Max.**
A	1.35	1.80
A1	0.05	0.25
A2	1.25	1.55
D	4.70	5.10
E	5.80	6.30
E1	3.70	4.10
b	0.306	0.51
c	0.19	0.25
e	1.27	
L	0.40	0.89
θ	0°	8°

i-core

6.3、MSOP8

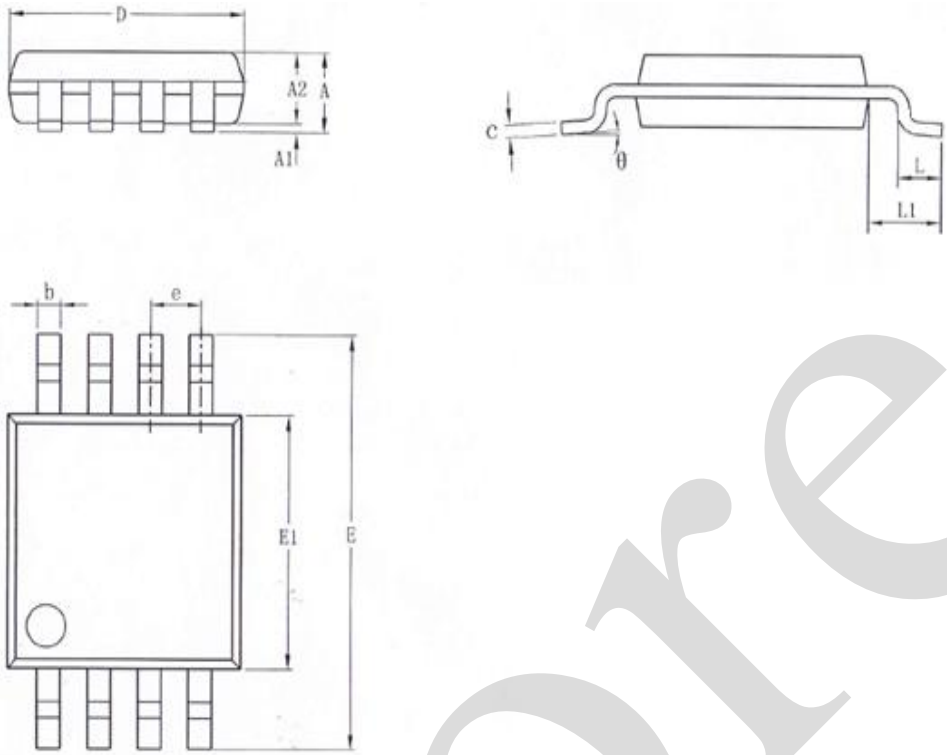

2023/12/A	Dimensions In Millimeters	
Symbol	**Min**	**Max**
A	—	1.10
A1	0.05	0.15
A2	0.75	0.95
b	0.22	0.38
c	0.08	0.23
D	2.90	3.10
E	4.70	5.10
E1	2.90	3.10
e	0.65	
L	0.40	0.80
L1	0.95	
θ	0°	8°

i-core

6.4、TSSOP8

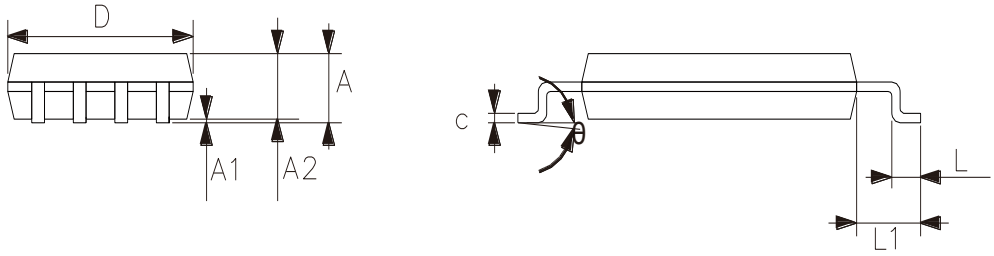

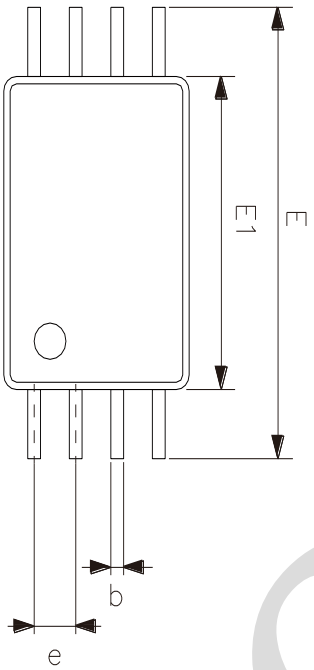

2023/12/A	Dimensions In Millimeters	
Symbol	**Min**	**Max**
A	—	1.20
A1	0.05	0.15
A2	0.80	1.05
b	0.19	0.30
c	0.09	0.20
D	2.90	3.10
E1	4.30	4.50
E	6.20	6.60
e	0.65	
L	0.45	0.75
L1	1.00	
θ	0°	8°

6.5、SOP14

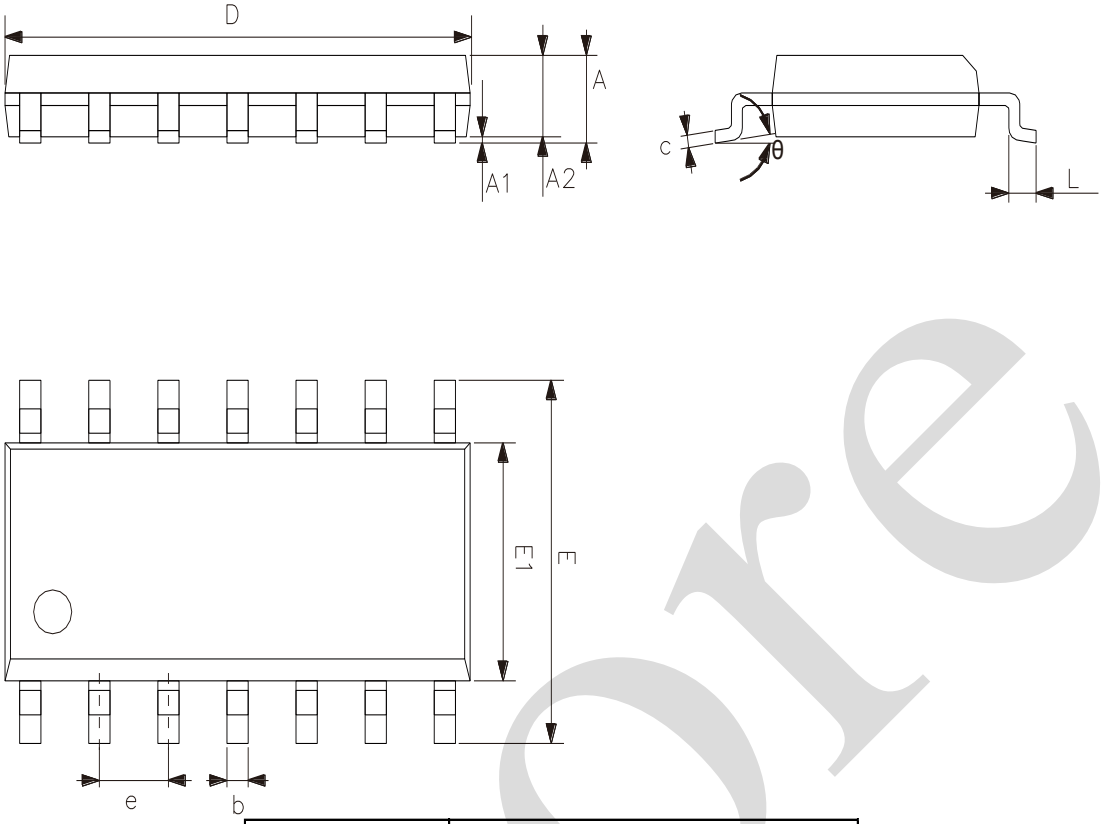

2023/12/A	Dimensions In Millimeters	
Symbol	**Min.**	**Max.**
A	1.50	1.75
A1	0.05	0.25
A2	1.30	—
b	0.33	0.50
c	0.19	0.25
D	8.43	8.76
E	5.80	6.25
E1	3.75	4.00
e	1.27	
L	0.40	0.89
θ	0°	8°

i-core

6.6、TSSOP14

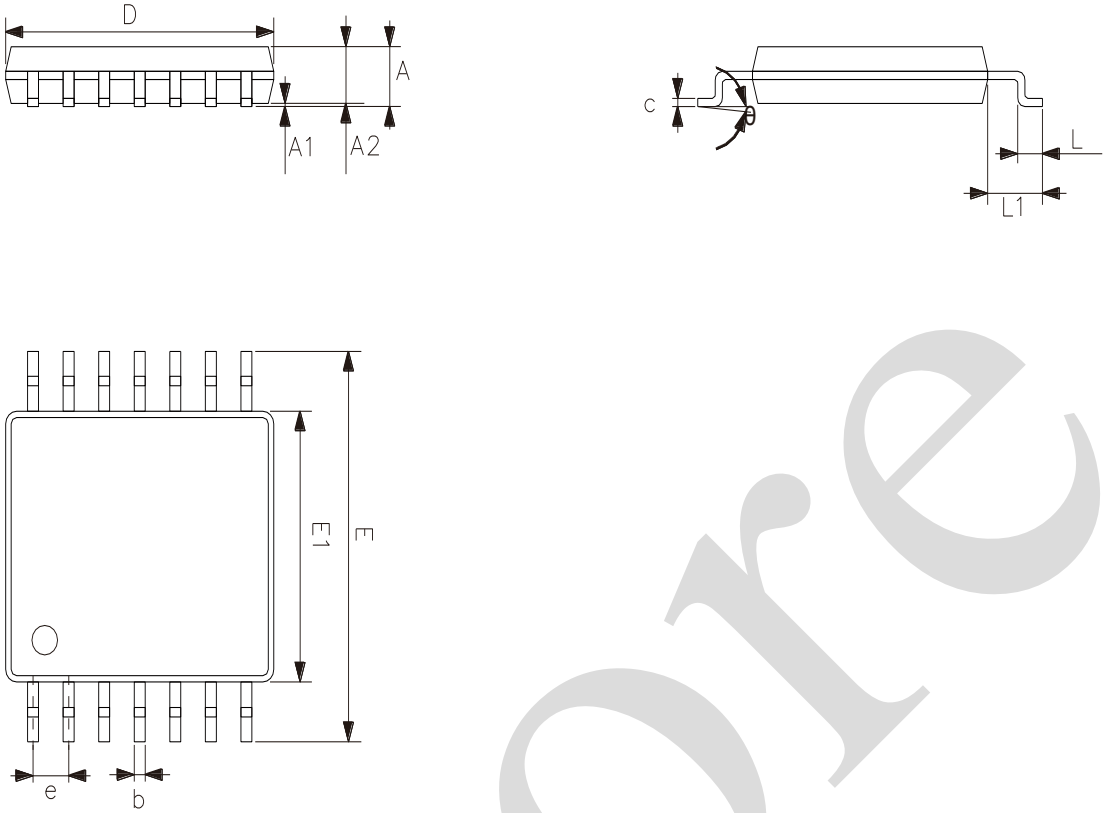

2023/12/A	Dimensions In Millimeters	
Symbol	**Min**	**Max**
A	—	1.20
A1	0.05	0.15
A2	0.80	1.05
b	0.19	0.30
c	0.09	0.20
D	4.90	5.10
E1	4.30	4.50
E	6.20	6.60
e	0.65	
L	0.45	0.75
L1	1.00	
θ	0°	8°

i-core

7、Statements And Notes

7.1、The name and content of Hazardous substances or Elements in the product

Part name	Hazardous substances or Elements									
	Lead and lead compounds	Mercury and mercury compounds	Cadmium and cadmium compounds	Hexavalent chromium compounds	Polybrominated biphenyls	Polybrominated biphenyl ethers	Dibutyl phthalate	Butylbenzyl phthalate	Di-2-ethylhexyl phthalate	Diisobutyl phthalate
Lead frame	○	○	○	○	○	○	○	○	○	○
Plastic resin	○	○	○	○	○	○	○	○	○	○
Chip	○	○	○	○	○	○	○	○	○	○
The lead	○	○	○	○	○	○	○	○	○	○
Plastic sheet installed	○	○	○	○	○	○	○	○	○	○
explanation	○: Indicates that the content of hazardous substances or elements in the detection limit of the following the SJ/T11363-2006 standard. ×: Indicates that the content of hazardous substances or elements exceeding the SJ/T11363-2006 Standard limit requirements.									

7.2、Notes

We recommend you to read this chapter carefully before using this product.

The information in this chapter is provided for reference only and i-Core disclaims any express or implied warranties, including but not limited to applicability, special application or non-infringement of third party rights.

This product is not suitable for critical equipment such as life-saving, life-sustaining or safety equipment. It is also not suitable for applications that may result in personal injury, death, or serious property or environmental damage due to product malfunction or failure. I-Core will not be liable for any damages incurred by the customers at their own risk for such applications.

The customer is responsible for conducting all necessary tests i-Core's application to avoid failure in the application or the application of the customer' s third party users. I-Core does not accept any liability.

The Company reserves the right to change or improve the information published in this chapter at any time. The information in this chapter are subject to change without notice. We recommend the customer to consult our sales staff before purchasing.

Please obtain related materials form i-Core's regular channels and we are not responsible for its content if it is provided by sources other than our company.

In case of any conflict between the Chinese and English version, the version is subject to the Chinese one.